衍惠电子 **AC SOCKET**

DB-14-T-20-S1 2.5A/250Vac & 5A/250Vac SPECIFICATION

1. Dielectric withstand strength	AC 2000V/1min
2. Insulation resistance	⩾100MΩ
3. Operation force	1.5～5kgf
4. Pull focre of terminal	60N
5. Solderability test	230±5°C / 3S
6. Solidering heat resistance	260±5°C / 5S
7. Life test	6,000 cycle
8. Heat resistance	80±2°C / 96h
9. Cold resistance	-20±2°C / 96h
10. Salt spray test	24h

DRAWING

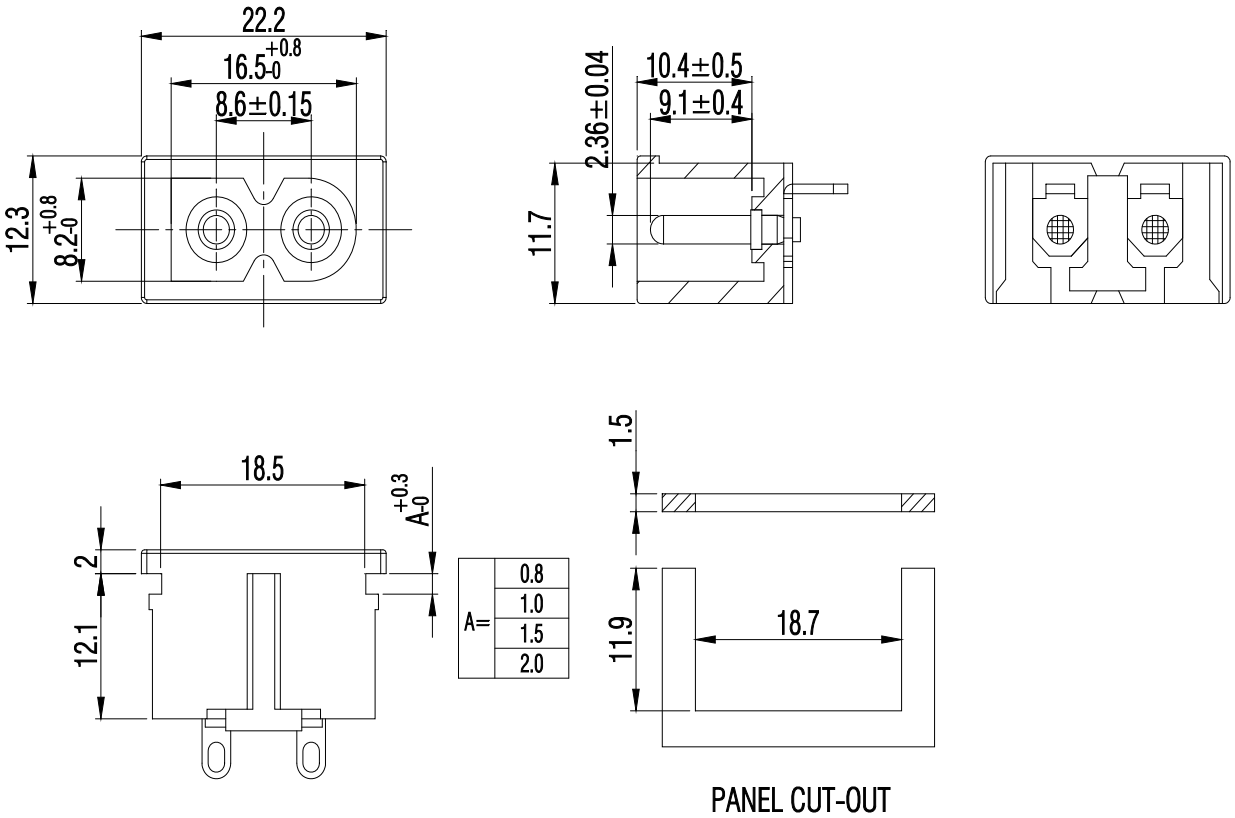
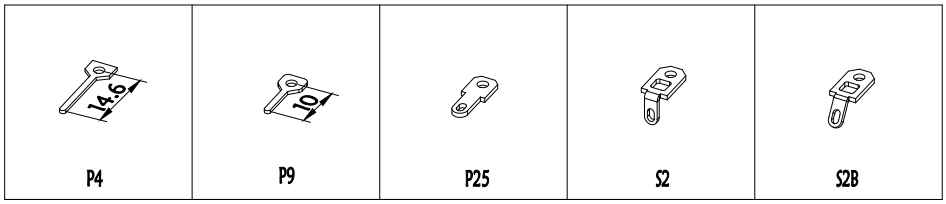
Terminals Type